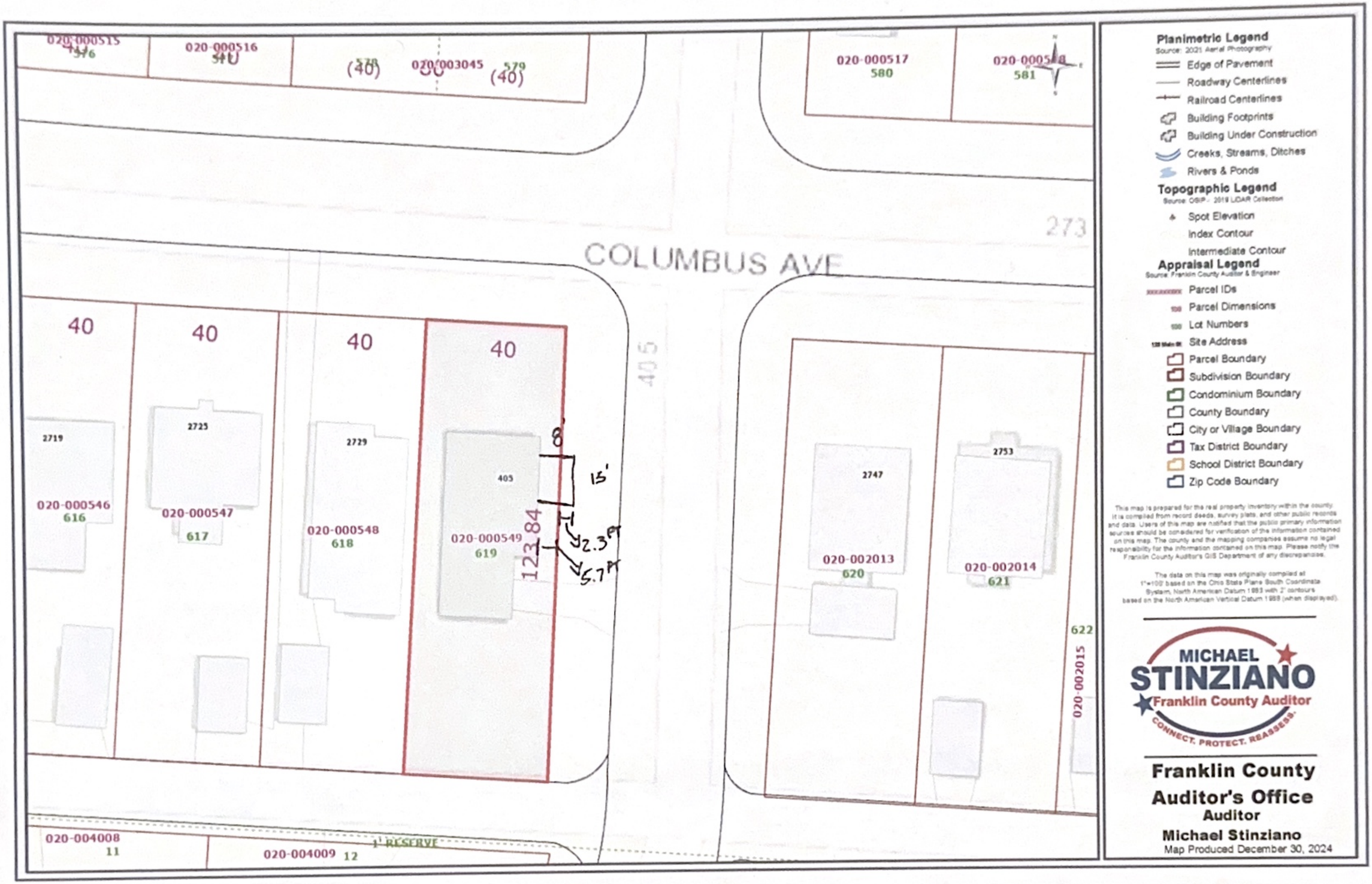
020-000515
576
020-000516
540
(40)
578
020-003045
579
(40)
020-000517
580
020-000518
581
273
COLUMBUS AVE
40
40
40
40
405
2719
2725
2729
405
2747
2753
8'
15'
2.3'
5.7'
123.84
020-000546
616
020-000547
617
020-000548
618
020-000549
619
020-002013
620
020-002014
621
622
020-002015
020-004008
11
020-004009
12
1' RESERVE
Planimetric Legend
Source: 2021 Aerial Photography
Edge of Pavement
Roadway Centerlines
Railroad Centerlines
Building Footprints
Building Under Construction
Creeks, Streams, Ditches
Rivers & Ponds
Topographic Legend
Source: OSIP - 2019 LiDAR Collection
Spot Elevation
Index Contour
Intermediate Contour
Appraisal Legend
Source: Franklin County Auditor & Engineer
Parcel IDs
Parcel Dimensions
Lot Numbers
Site Address
Parcel Boundary
Subdivision Boundary
Condominium Boundary
County Boundary
City or Village Boundary
Tax District Boundary
School District Boundary
Zip Code Boundary
This map is prepared for the real property inventory within the county. It is compiled from record deeds, survey plats, and other public records and data. Users of this map are notified that the public primary information sources should be considered for verification of the information contained on this map. The county and the mapping companies assume no legal responsibility for the information contained on this map. Please notify the Franklin County Auditor's GIS Department of any discrepancies.
The data on this map was originally compiled at 1"=100' based on the Ohio State Plane South Coordinate System, North American Datum 1983 with 2' contours based on the North American Vertical Datum 1988 (when displayed).
MICHAEL
STINZIANO
Franklin County Auditor
CONNECT. PROTECT. REASSESS.
Franklin County
Auditor's Office
Auditor
Michael Stinziano
Map Produced December 30, 2024

Code Compliance:
It is the builders responsibility to assure that the building complies with all governing codes, this includes but not limited to the local code
Stair Compliance: (per local code section R311.7)

Maximum Nosing:	1¼"
Minimum Nosing:	¾"
Max. Riser Variation:	⅜"
Max. Tread Variation:	⅜"
Max. Handrail Projection:	4½"
Min. Stair Clear Width:	36"
Maximum Riser Height:	7¾"
Minimum Tread Depth:	10"
Minimum Headroom height:	6'-8"
Max. Cross Section Dim. of the Handgrip Portion of a Handrail:	2¼"
Min. Handrail Height:	34"
Max. Handrail Height:	38"
Min. Guardrail Height:	36"
Min. Guardrail Height at stairs:	34"

All Required Handrails shall be continuous the full length of the stairs. Ends shall be returned or shall terminate in newel posts or safety terminals.

The following notations are taken from local code section R308 Glazing:

R308.3 Human impact loads. Individual glazed areas including glass mirrors in hazardous locations such as those indicated in Section 308.4 shall pass the test requirements of CPSC 16-CFR, Part 1201.

R308.4 Hazardous locations. The following shall be considered specific hazardous locations for the purposes of glazing:
1. Glazing in swinging doors except jalousies.
2. Glazing in fixed and sliding panels of sliding door assemblies and panels in sliding and bifold closet door assemblies.
3. Glazing in storm doors.
4. Glazing in section R308.4, Item 6, in walls perpendicular to the plane of the door in a closed position or where access through the door is to a closet, storage area or bathroom. Glazing in these applications should comply with section R308.4, Item 7.
5. Glazing in doors and enclosures for hot tubs, whirlpools, saunas, steam rooms, bathtubs and showers. Glazing in any part of a building wall enclosing these compartments where the bottom edge of the glazing is less than 60 inches (1524 mm) above the drain inlet.
6. Glazing, in an individual fixed or operable panel adjacent to a door where the nearest vertical edge is within a 24-inch (610 mm) arc of the door in a closed position and whose bottom edge is less than 60 inches (1524 mm) above the floor or walking surface.
7. Glazing in an individual fixed or operable panel, other than those locations described in Items 5 and 6 above, that meets all of the following conditions:
7.1 Exposed area of an individual pane greater than 9 square feet (0.836m2).
7.2 Bottom edge less than 18 inches (457 mm) above the floor.
7.3 Top edge greater than 36 inches (914 mm) above the floor.
7.4 One or more walking surfaces within 36 inches (914 mm) horizontally of the glazing.
8. All glazing in railings regardless of an area or height above a walking surface. Included are structural baluster panels and nonstructural infill panels.
9. Glazing in walls and fences enclosing indoor and outdoor swimming pools where the bottom edge of the pool side is less than 60 inches (1524mm) above a walking surface and (2) within 36 inches (914 mm) horizontally of a walking surface. This shall apply to single glazing and all panes in multiple glazing.
10. Glazing adjacent to stairways landing and ramps within 36" horizontally of a walking surface when the exposed surface of the glass is less than 60" above the pine to beane of the adjacent walking surface.
11. Glazing adjacent to stairways within 60" horizontally of the bottom tread of a stairway in any direction when the exposed surface of the glass is less than 60" above the nose of the tread.

The following notations are taken from Local Code section 310 Exits:

R310.1 Emergency escape and rescue required. Every sleeping room shall have at least one openable window or exterior door approved for emergency egress or rescue. The units must be operable from the inside to a full clear opening without the use of a key or tool. Where windows are provided as a means of egress or rescue they shall have a sill height of not more than 44 inches (1118 mm) above the floor.
R310.1.1 Minimum size. All egress or rescue windows from sleeping rooms must have a net clear opening of 5.7 square feet (0.530 m2). The minimum net clear opening height shall be 24 inches (559 mm). The minimum net clear opening width shall be 20 inches (508 mm).

It is the builder's responsibility to assure that the final windows selected for all sleeping areas meet the criteria listed above.

Window shown on this plan are labeled as Semco Clad Casement.

The following notations are taken from local code section R313 Smoke Alarms:

R314.1 Smoke alarms. Smoke alarms shall be installed in the following locations:
1. In each sleeping room.
2. Outside each separate sleeping area in the immediate vicinity of the bedrooms.
3. On each additional story of the dwelling including basements but not including crawl spaces and uninhabitable attics. In dwellings or dwelling units with split levels and without an intervening door between the adjacent levels, a smoke alarm installed on the upper level shall suffice for the adjacent lower level provided that the lower level is less than one full story below the upper level.
When more than one smoke alarm is required to be installed within an individual dwelling unit the alarm devices shall be interconnected in such a manner that the actuation of one alarm will activate all of the alarms in the individual unit. The alarm shall be clearly audible in all bedrooms over the background noise levels with all intervening doors closed.
All smoke alarms shall be installed in accordance with the provisions of this code and the household fire warning equipment provisions of NFPA 72.
R314.2 Power source. In new construction, the required smoke detectors shall receive their primary power from the building wiring when such wiring is served from a commercial source, and when primary power is interrupted, shall receive power from a battery. Wiring shall be permanent and without a disconnecting switch other than those required for overcurrent protection.
Smoke detectors may be battery operated when installed in buildings without commercial power or in buildings that undergo alterations, repairs or additions regulated by Section R313.1.1.

R303.3 Bathrooms. Bathrooms, water closet compartments and other similar rooms shall be provided with aggregate glazing area in windows of not less than 3 square feet (0.279m2), one-half of which must be openable.
exception: The glazed areas shall not be required where artificial light and an approved mechanical ventilation system are provided. The minimum ventilation rates shall be 50 cfm for intermittent ventilation or 20 cfm for continous ventilation. Bathroom exhausts shall be vented directly to the outside.
General Notes:
1. All walls are dimensioned stud to stud.
2. Exterior walls to be 6" unless noted otherwise.
3. Interior walls to be 3½" unless noted otherwise.
4. All angled walls are 45 unless noted otherwise.
5. All openings in load bearing and exterior walls shall have a minimum lintel made up (2)2x8's with ½" plywood spacers.
6. Floor joists are to be doubled under parallel walls.
7. It is the Builder's option to double floor joists to achieve a floor with less deflection for areas to receive tile.
8. All lumber sizes and species may be upgraded for ease of construction.
9. All posts for point loads are to be a minimum of (2)2x4's nailed per the fastening schedule on sheet 1.
10. Refer to special notes and elevations when nail shading differs on plan. This usually means that a special plate height is required for that wall.
11. In addition to these notes, refer to the notes on sheet 1.
12. It is the builders responsibility to assure all structural loads are transferred to the foundation.
Wood trusses:
The following notes only apply if wood trusses are used.
1. Use truss clips to fasten all trusses to the top plate of walls. Do not nail trusses to top plate directly.
2. For interior wall connections, use Simpson model STC.
3. For scissors truss connections, use Simpson TC-24 or TC-25.
4. When applying drywall to the bottom chord of the roof truss, use Simpson DS drywall stops at interior wall intersection. Hold screws and nails back 15" from wall.
Please Note:
Any discrepancies, errors and/or omissions in the notes, dimensions, and/or drawings contained on these documents shall be brought to the attention of the designer immediately after the said discrepancies are discovered. Proceeding with construction constitutes the acceptance of these documents and any discrepancies, errors and/or omissions become the responsibility of the building contractor.

NOTE:
PROVIDE ENGINEERED DATA SHEETS FOR ALL ENGINEERED LUMBER, INCLUDING LVL's, PSL's AND GLUE-LAMS, AT THE TIME OF FRAMING INSPECTION. FOLLOW ALL MANUFACTURERS SPECS. AND RECOMMENDATIONS FOR NAILING AND FASTENING MEMBERS.

NOTE:
INSTALL ALL BUILDING MATERIALS, FINISH AND STRUCTURAL, PER MANUFACTURERS SPECIFICATIONS and / or RECOMMENDATIONS.

PLEASE NOTE:
DUE TO THE VARIANCES BETWEEN PREFABRICATED FIRE PLACE UNIT DIMENSIONS, ALL DIMENSIONS PERTAINING TO FIREPLACE ENCLOSURES ARE TO BE FIELD VERIFIED.

NOTE:
ALL INTERIOR DOOR RETURNS TO BE 6" UNLESS DOOR IS CENTERED IN A ROOM, CLOSET or NOTED OTHERWISE.

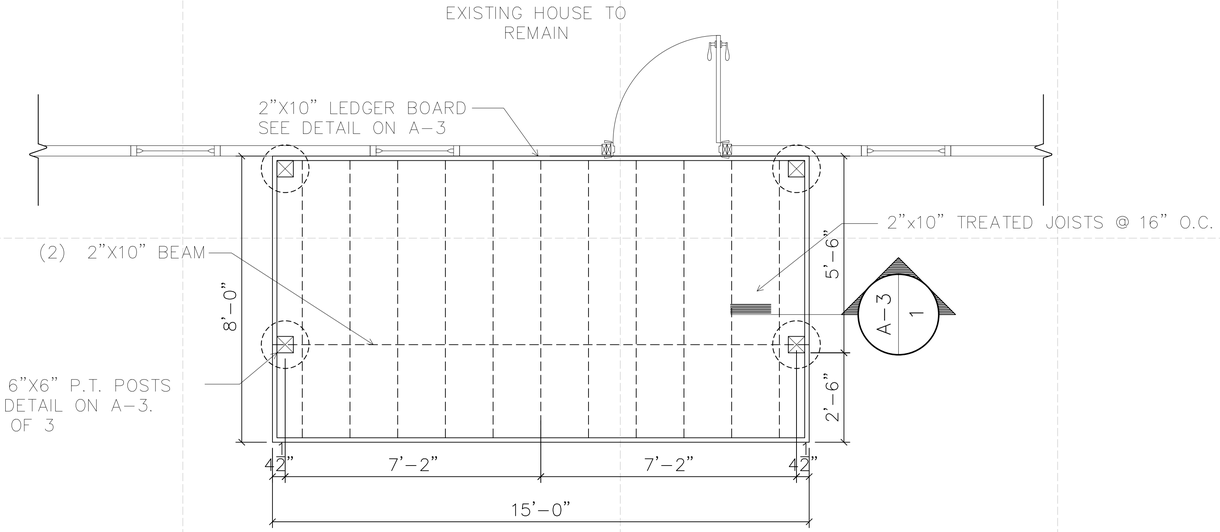

FIRST FLOOR PLAN
SCALE: ½" = 1'-0"

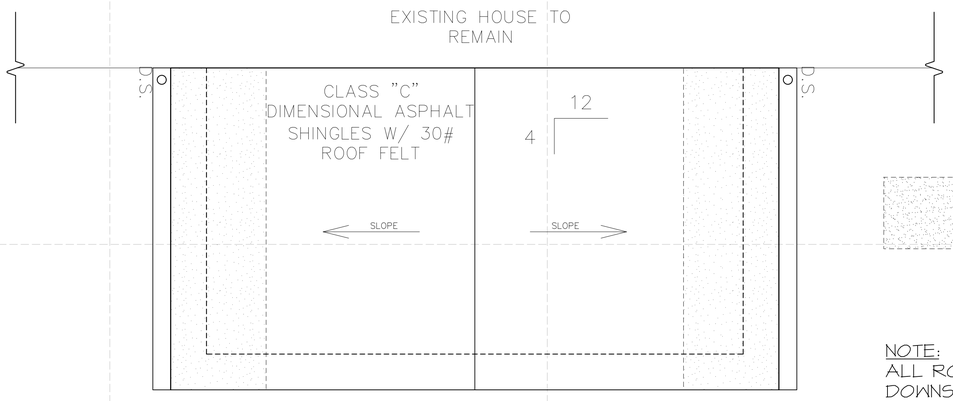

GRACE ® ICE & WATER SHIELD

NOTE:
ICE & WATER SHIELD TO EXTEND 36" BEYOND OUTSIDE OF EXTERIOR WALL.

NOTE:
ALL ROOF WATER SHALL BE CARRIED FROM DOWNSPOUTS TO THE STREET GUTTER, STORM DITCH or STORY SEWER THROUGH THIN WALLED POLYVINYL CHLORIDE PIPE (PVC), CORRUGATED ADS, or APPROVED EQUIVALENT HAVING A MINIMUM DIAMETER OF FOUR INCHES (4"), BEDDED IN SAND AND LAID TO PROPER GRADE.

ROOF PLAN
SCALE: ½" = 1'-0"

MARK	DATE	DESCRIPTION
ISSUE:		

PROJECT NO:
CAD FILE:
DATE:
DRAWN BY:
CHECKED BY:
COPYRIGHT:

SHEET TITLE:
FLOOR PLANS

DRAWING SHEET NO:
A-1

Code Compliance:
It is the builders responsibility to assure that the building complies with all governing codes, this includes but not limited to the local code

The following notations are taken from local code section R308 Glazing:

R308.3 Human impact loads. Individual glazed areas including glass mirrors in hazardous locations such as those indicated in Section 308.4 shall pass the test requirements of CPSC 16-CFR, Part 1201.

R308.4 Hazardous locations. The following shall be considered specific hazardous locations for the purposes of glazing:
1. Glazing in swinging doors except jalousies.
2. Glazing in fixed and sliding panels of sliding door assemblies and panels in sliding and bifold closet door assemblies.
3. Glazing in storm doors.
4. Glazing in section R308.4, item 6, in walls perpendicular tothe plane of the door in a closed position or where access through the door is to a closet, storage area or bathroom. Glazing in these applications should comply with section R308.4, item 7.
5. Glazing in doors and enclosures for hot tubs, whirlpools, saunas, steam rooms, bathtubs and showers. Glazing in any part of a building wall enclosing these compartments where the bottom edge of the glazing is less than 60 inches (1524 mm) above the drain inlet.
6. Glazing, in an individual fixed or operable panel adjacent to a door where the nearest vertical edge is within a 24-inch (610 mm) arc of the door in a closed position and whose bottom edge is less than 60 inches (1524 mm) above the floor or walking surface.
7. Glazing in an individual fixed or operable panel, other than those locations described in Items 5 and 6 above, that meets all of the following conditions:
7.1 Exposed area of an individual pane greater than 9 square feet (0.836m2).
7.2 Bottom edge less than 18 inches (457 mm) above the floor.
7.3 Top edge greater than 36 inches (914 mm) above the floor.
7.4 One or more walking surfaces within 36 inches (914 mm) horizontally of the glazing.
8. All glazing in railings regardless of an area or height above a walking surface. Included are structural balaster panels and nonstructural infill panels.
9. Glazing in walls and fences enclosing indoor and outdoor swimming pools where the bottom edge of the pool side is (1)less than 60 inches (1524mm) above a walking surface and (2) within 36 inches (914 mm) horizontally of a walking surface. This shall apply to single glazing and all panes in multiple glazing.
10. Glazing adjacent to stairways landing and ramps within 36" horizontally of a walking surface when the exposed surface of the glass is less than 60" above the plane of the adjacent walking surface.
11. Glazing adjacent to stairways within 60" horizontally of the bottom tread of a stairway in any direction when the exposed surface of the glass is less than 60" above the nose of the tread.

The following notations are taken from Local Code section 310 Exits:

R310.1 Emergency egress required. Every sleeping room shall have at least one openable window or exterior door approved for emergency egress or rescue. The units must be operable from the inside to a full clear opening without the use of a key or tool. Where windows are provided as a means of egress or rescue they shall have a sill height of not more than 44 inches (1118 mm) above the floor.
R310.1.1 Minimum size. All egress or rescue windows from sleeping rooms must have a net clear opening of 5.7 square feet (0.530 m2). The minimum net clear opening height shall be 24 inches (559 mm). The minimum net clear opening width shall be 20 inches (508 mm).

It is the builder's responsibility to assure that the final windows selected for all sleeping areas meet the criteria listed above.

Window shown on this plan are labeled as Semco Glad Casement.

General Notes:
1. A ⅜" plywood backer is to be installed behind all trim boards used in conjunction with stucco and wood sided walls.
2. It is the Builder's responsibility to determine the final method and quantity of roof ventilation.
3. It is the Mason's responsibility to ensure that any masonry fireplaces draft properly and that chimneys are built to the standards of the local building code.
4. In addition to these notes, refer to the notes on sheet 1.
5. It is the builders responsibility to assure all structural loads are transferred to the foundation.
6. It is the builders responsibility to assure all finish materials used are to be installed per manufacturer's recommendations or per industry standards. This includes, but is not limited to flashing. Designer is not responsible for defects in materials used or installation of materials.
7. It is the builder's responsibility to determine gutter size and down spout size, quantity and location.

Wood trusses:
The following notes only apply if wood trusses are used.
1. Use truss clips to fasten all trusses to the top plate of walls. Do not nail trusses to top plate directly.
2. For interior wall connections, use Simpson model STC.
3. For scissors truss connections, use Simpson TC-24 or TC-25.
4. When applying drywall to the bottom chord of the roof truss, use Simpson DS drywall stops at interior wall intersection. Hold screws and nails back 15" from wall.
5. It is the Builder's and/or the Truss Manufacturer's responsibility to take any measurements used for truss manufacturing from only the actual field conditions . Do not build trusses from the dimensions on this plan for actual field conditions may vary from the information given in this plan set. Designer is not responsible for any error in truss orders or manufacturing.
6. The truss manufacturer is to adjust heel heights as needed to align fascia boards and any other trim material to match the elevation drawings in this plan set.

Please Note:
Any discrepancies, errors and/or omissions in the notes, dimensions, and/or drawings contained on these documents shall be brought to the attention of the designer immediately after the said discrepancies are discovered. Proceeding with construction constitutes the acceptance of these documents and any discrepancies, errors and/or omissions become the responsibility of the building contractor.

NOTE:
INSTALL ALL BUILDING MATERIALS, FINISH AND STRUCTURAL, PER MANUFACTURERS SPECIFICATIONS and / or RECOMMENDATIONS.

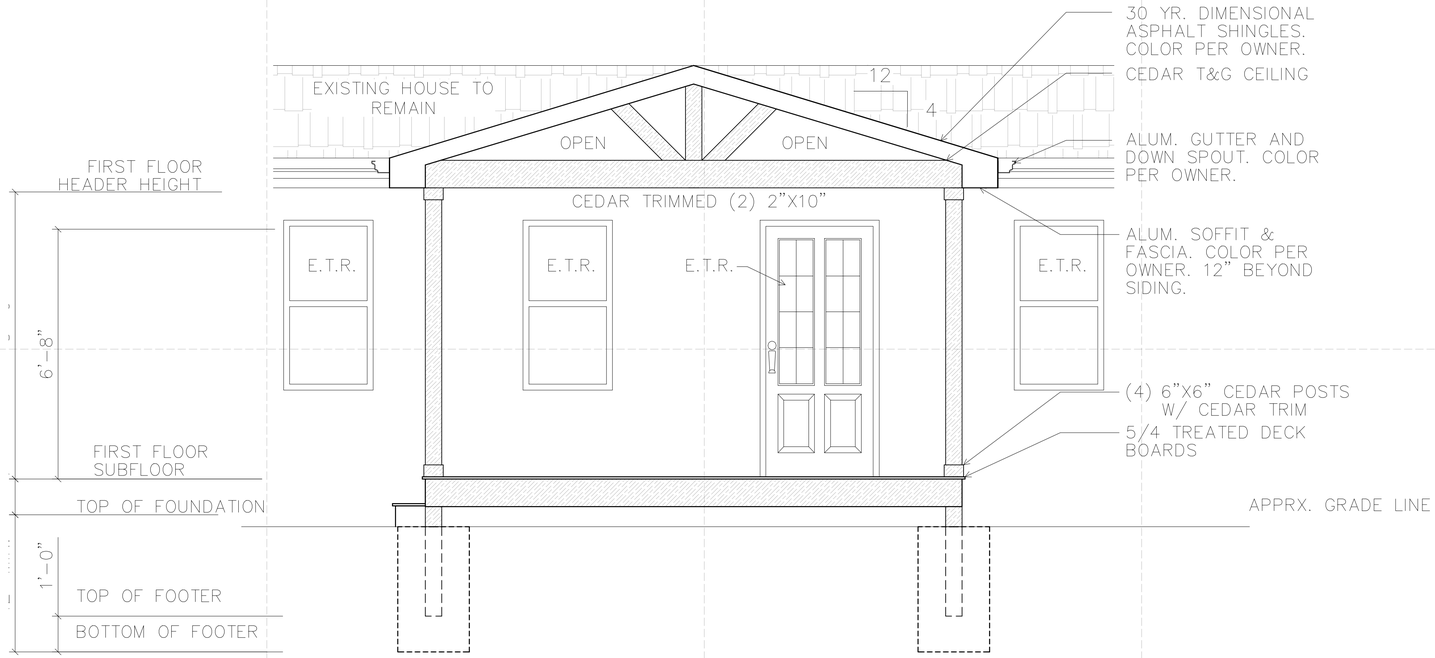

FRONT ELEVATION
SCALE: ⅜" = 1'-0"

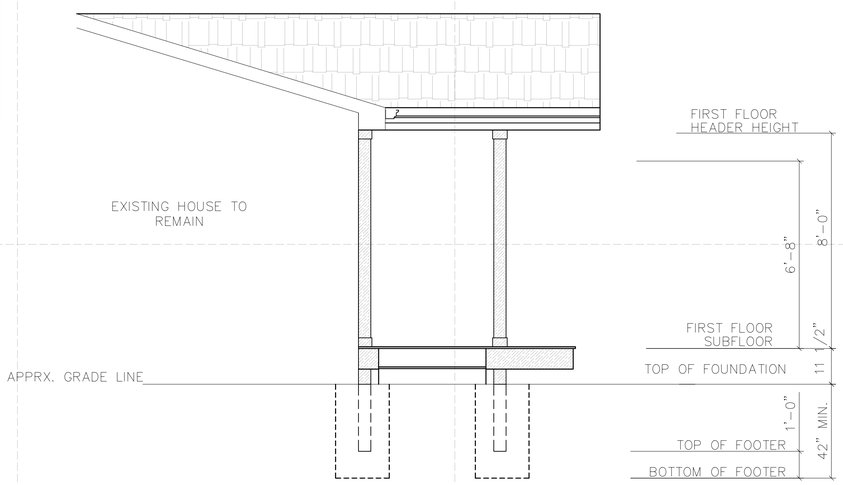

LEFT ELEVATION
SCALE: ⅜" = 1'-0"

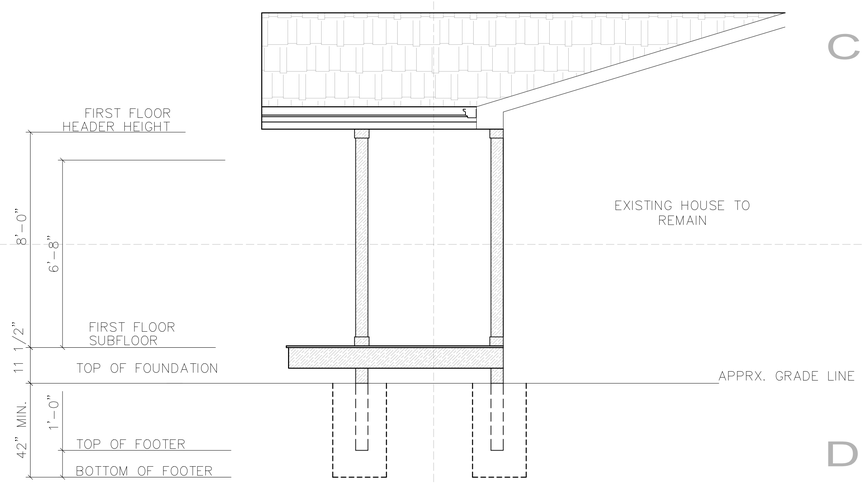

RIGHT ELEVATION
SCALE: ⅜" = 1'-0"

MARK	DATE	DESCRIPTION
ISSUE:		

PROJECT NO:
CAD FILE:
DATE:
DRAWN BY:
CHECKED BY:
COPYRIGHT:

SHEET TITLE:
ELEVATIONS

DRAWING SHEET NO:
A-2

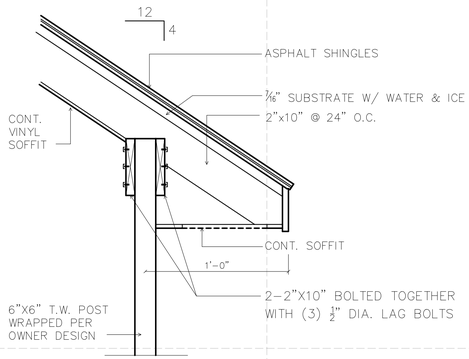

1 A-3 WALL SECTION
SCALE: 1 1/2" = 1'-0"

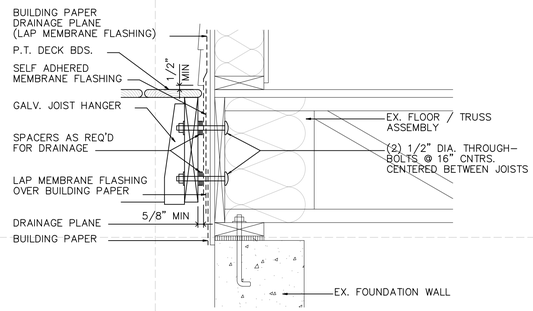

2 A-3 LEDGER BOARD DETAIL
SCALE: 1 1/2" = 1'-0"

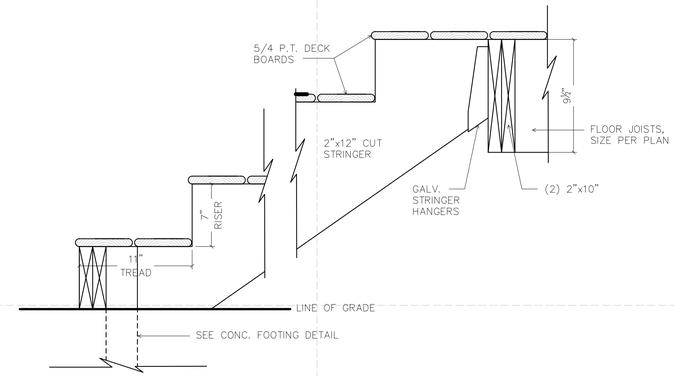

3 A-3 STAIR STRINGER DETAIL
SCALE: 1 1/2" = 1'-0"

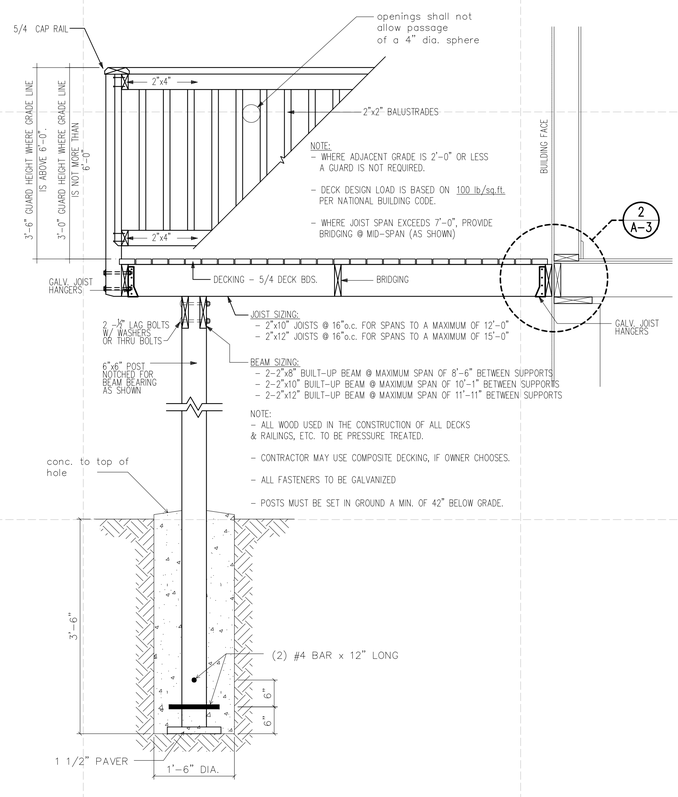

4 A-3 DECK SECTION
SCALE: 3/4" = 1'-0"

PROJECT NO:
CAD FILE:
DATE:
DRAWN BY:
CHECKED BY:
COPYRIGHT:

SHEET TITLE:

DETAILS

DRAWING SHEET NO:

A-3